compagnie drift
Heidenspass & Höllenangst
(Hell's Bells & Furtive Folly)

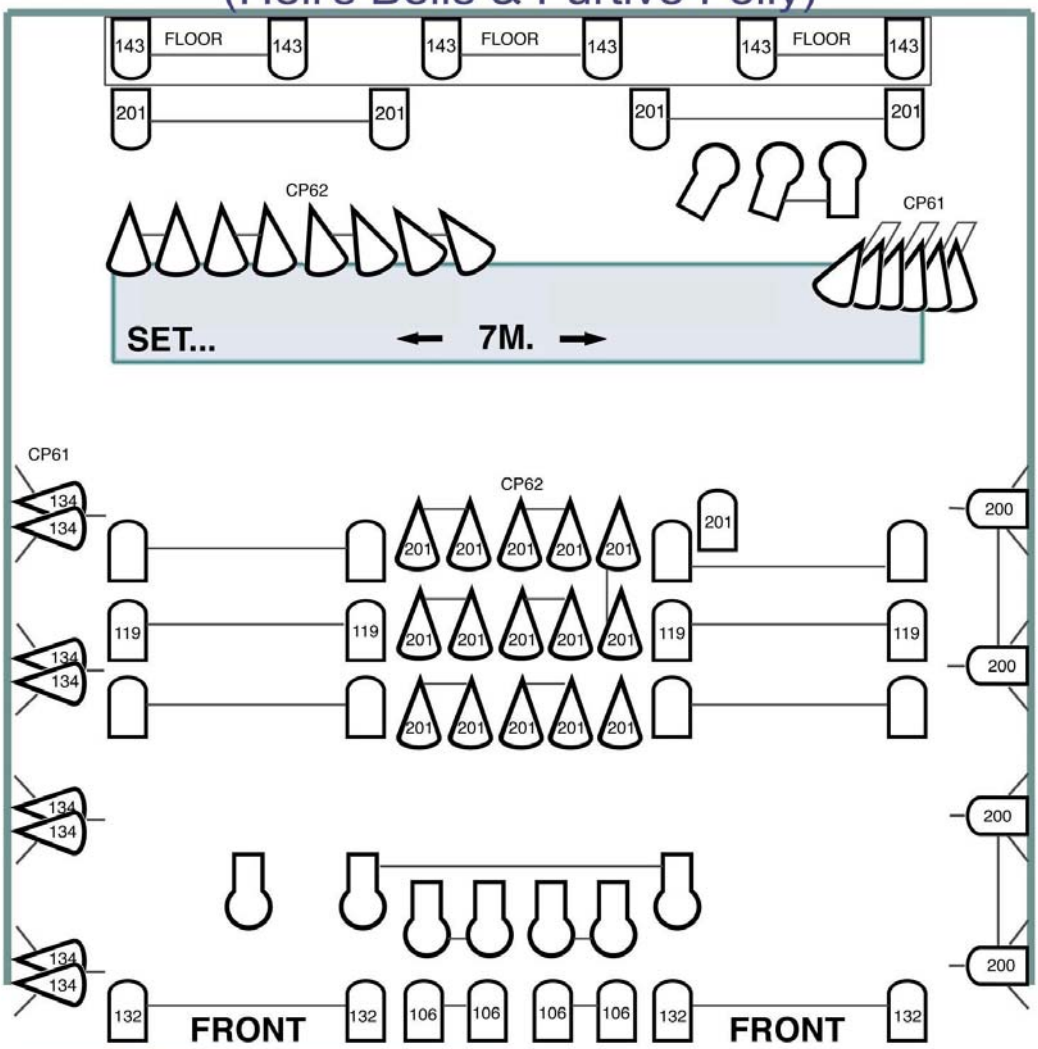

35 X	PC 1000W	MINIMUM 48 CHANNELS+PROGRAMMABLE DESK WITH SUBMASTERS.
23 X	PAR 1000W CP 62	THE AUDIO MIX DESK MUST BE BESIDE TO LIGTH DESK.
14 X	PAR 1000W CP 61	SPEAKERS MUST BE LEFT AND RIGHT TO THE BACK OF STAGE
10 X	PROFILES 1000W	
8 X	STANDS	

compagnie drift, bergstrasse 12 a, ch-8700 küsnacht, www.drift.ch
artistic directors: béatrice jaccard & peter schelling, ph/f ++ 41-(0)1- 910 45 70, drift@access.ch
company management: beatrice rossi, ph/f ++ 41-(0)41- 311 08 65, rossibeatrice@bluewin.ch